Model T-401/S-401

Brass Gate Valve

LEGEND VALVE

NO.	PART	MATERIAL
1	BODY	BRASS
2	BONNET	BRASS
3	STEM	BRASS
4	PACKING NUT	BRASS
5	DISC	BRASS
6	HAND WHEEL	CAST IRON
7	HAND WHEEL NUT	BRASS
8	PACKING	ASBESTOS FREE GRAPHITE

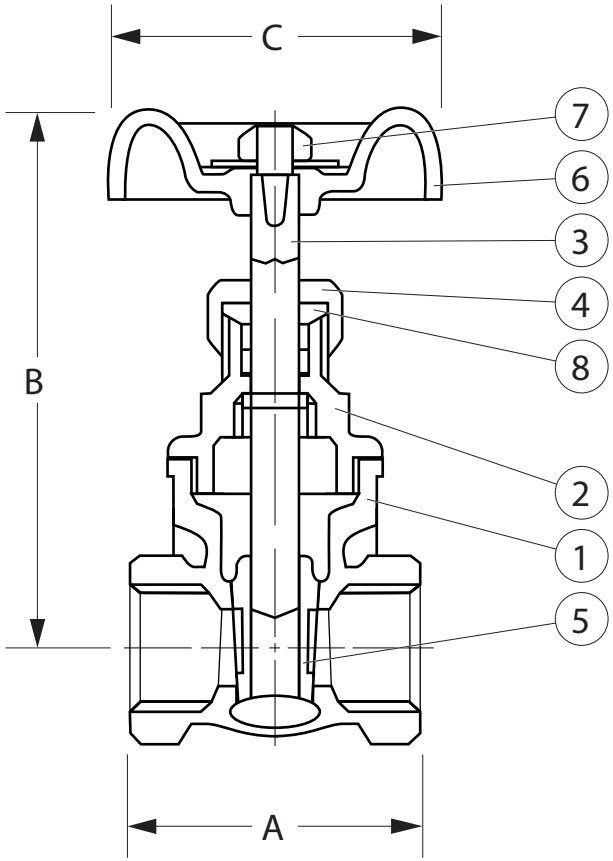

NSF

SIZE	1/4"	3/8"	1/2"	3/4"	1"	1-1/4"	1-1/2"	2"	2-1/2"	3"	4"
A (IPS)	1.62	1.62	1.69	1.85	2.13	2.40	2.44	2.84	3.51	3.98	4.57
A (CxC)			1.77	2.33	2.76	2.88	3.19	3.90	4.53	5.18	
B	3.27	3.29	3.52	4.02	4.57	5.38	6.03	7.50	9.25	10.75	12.60
C	2.13	2.13	2.13	2.13	2.40	2.96	2.96	3.19	4.14	4.45	5.20

- NOTES:
- 200 W.O.G. NON-SHOCK TO 200°F
- MEETS NSF 61 SECTION 8