NO.	PART NAME	QTY.
A1	BODY	1
A2	BEARING (BODY)	1
A3	PLUG	1
A5	GASKET (BODY)	1
A6	BONNET	1
A7	BEARING (BONNET)	1
A8	SCREW (SEE NOTE 5)	4
A8	STUD (SEE NOTE 5)	4
A9	FELT WASHER (LV, MNA, NT ACT'RS ONLY)	1
A10	U-RING SEAL (STEM SEAL OPTION NBR & FKM)	1
A10	WASHER (STEM SEAL OPTION T)	1
A10	SEAL (STEM SEAL OPTION G2)	1
A11	U-RING FILLER (STEM SEAL OPTION NBR & FKM)	1
A12	STUD (SEE NOTE 4)	1
A13	PIPE PLUG (PU & PD)	1
A14	CAUTION TAG	1
A15	NUT (SEE NOTE 5)	4

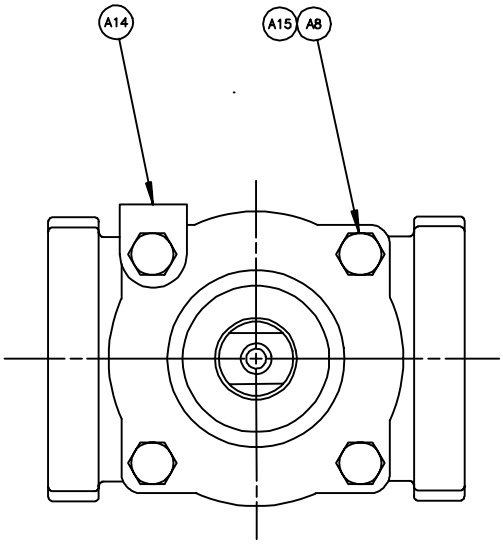

NOTE:

1. RECOMMENDED SPARE PARTS ARE ITEMS NUMBER A3, PLUG (IF RUBBER FACED), A5, A9, A10 AND A11.
2. WHEN ORDERING PARTS, SPECIFY VALVE SIZE AND MODEL NUMBER FROM DATA PLATE, ALSO GIVE DRAWING NUMBER WITH PART NAME, ITEM NUMBER AND QUANTITY.
3. CLOCKWISE ROTATION OF PLUG STEM CLOSES VALVE.
4. VALVE IS STOCKED WITH STUD FOR USE WITH MANUAL ACTUATORS (LV, NT AND MNA) STUD REQUIRED FOR POWER ACTUATORS WILL BE REPLACED AT ACTUATOR LEVEL.
5. WHEN VALVE IS SUPPLIED WITH ISO F10 ACTUATOR ADAPTOR ON 1/2" THRU 2" VALVES, SCREW (A8) IS REPLACED WITH A STUD AND NUT (A15) IS REQUIRED.

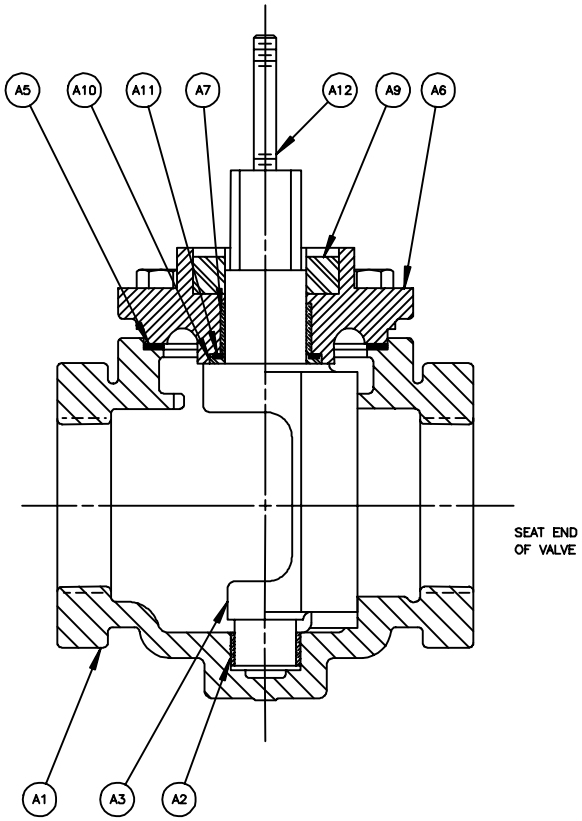

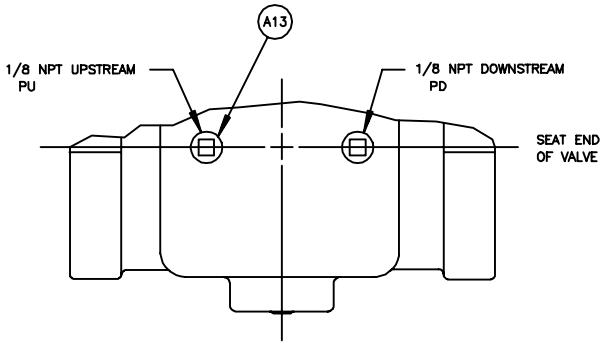

ALTERNATE VIEW SHOWING
PU OR PD

G	F	E	D	C	60436	04/04/01	
				B	54702	06/14/99	
				A	54213	02/13/98	

DeZURIK

SARTELL, MINNESOTA, U.S.A. 56377
CAMBRIDGE, ONTARIO, CANADA

VALVE ASSEMBLY SIZE 1/2" - 3" PEC VALVES
SCREWED, ALL EXCEPT CIH, CIS AND CIPL

DOCT. CODE	DRAWN	APPROVED	
C1	JJM	TK	A-50040
	CHECKED TK	DATE 02/06/98	