NO.	PART	MATERIAL
1	CAP	BRASS
2	BODY	BRASS
3	DISC	BRASS
4	HINGE PIN	BRASS
5	SCREW	BRASS

Model T-451/S-451

Brass Swing Check Valve

LEGEND VALVE

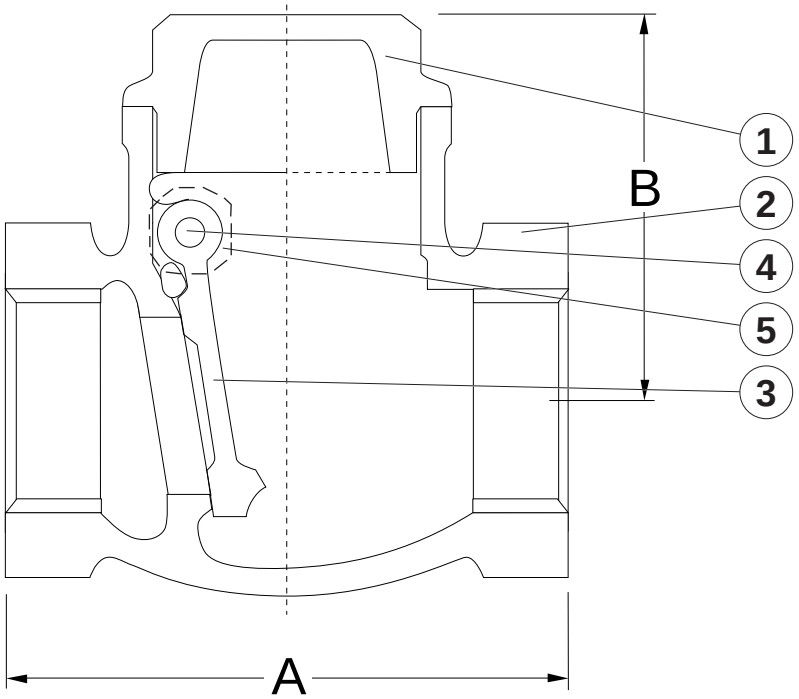

SIZE	1/4"	3/8"	1/2"	3/4"	1"	1-1/4"	1-1/2"	2"	2-1/2"	3"	4"
A (I.P.S.)	2.09	2.01	2.01	2.29	2.48	3.15	3.47	3.98	5.16	5.79	6.86
A (CxC)			3.03	3.03	3.74	4.37	5.12	5.95	6.90	7.60	
B	1.40	1.40	1.42	1.42	1.54	1.89	2.17	2.56	2.96	3.82	3.94

- NOTES:
- 200 W.O.G. NON-SHOCK
- 2-1/2" X 3" S-451 ARE BRONZE