ITEM NO.	PART NUMBER	DESCRIPTION	QTY.
1	E-1812EXT	Poly extension	1
2	Jack Nut	1/4"-20 jack nut	8

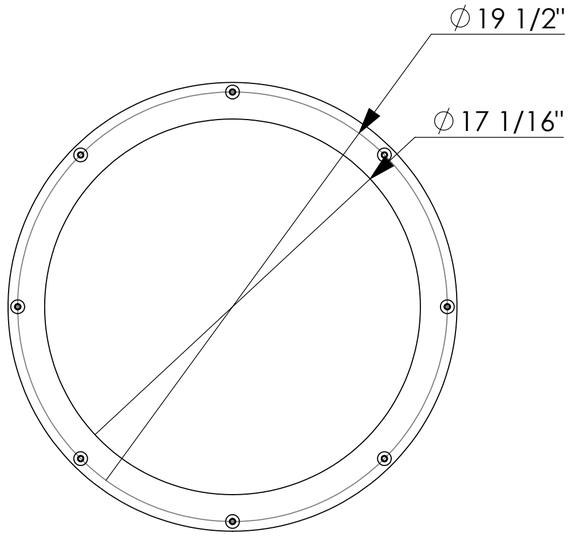

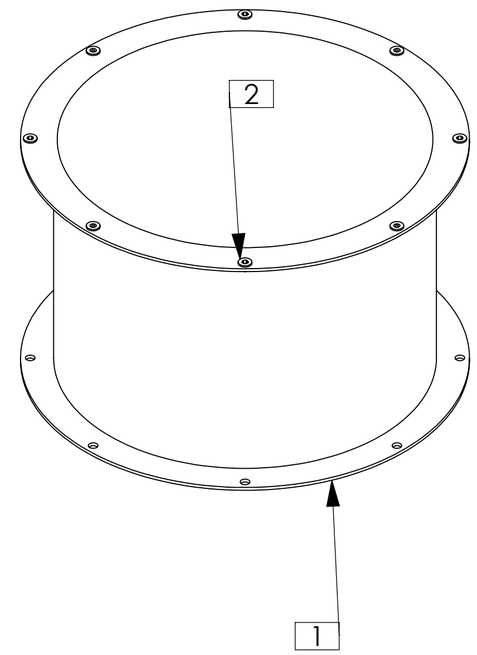

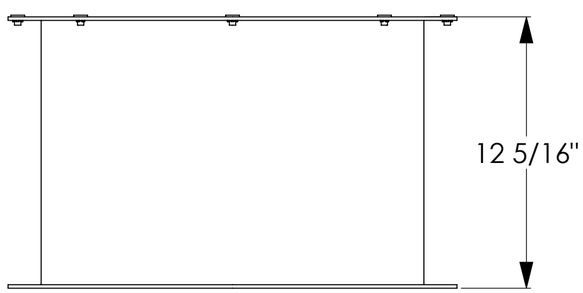

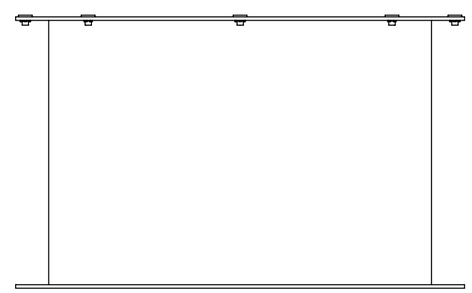

WEIGHT = 4.63

UNLESS OTHERWISE SPECIFIED:
DIMENSIONS ARE IN MILLIMETERS
SURFACE FINISH:
TOLERANCES:
LINEAR:
ANGULAR:

PUMP & DISCONNECT:

SO:

PO:

DO NOT SCALE DRAWING

REVISION 02

	NAME	DATE
DRAWN	DG	05/03/2016
CHK'D	DG	09/01/2016
APPV'D		
MFG		
Q.A		

MATERIAL:

WEIGHT:

TITLE:

DWG NO. E-1812EXT A2

SCALE:1:5

SHEET 1 OF 1

TOPP INDUSTRIES INCORPORARED
P.O. BOX 420 ^ HWY. 25 N.
ROCHESTER, IN. 46975
(800) 354-4534 FAX: (574) 223-6106