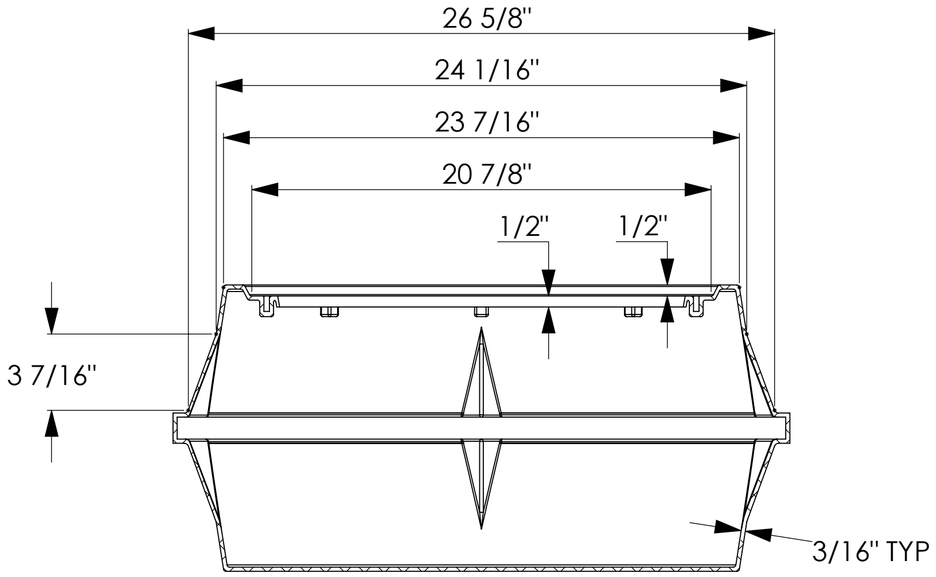

SECTION A-A

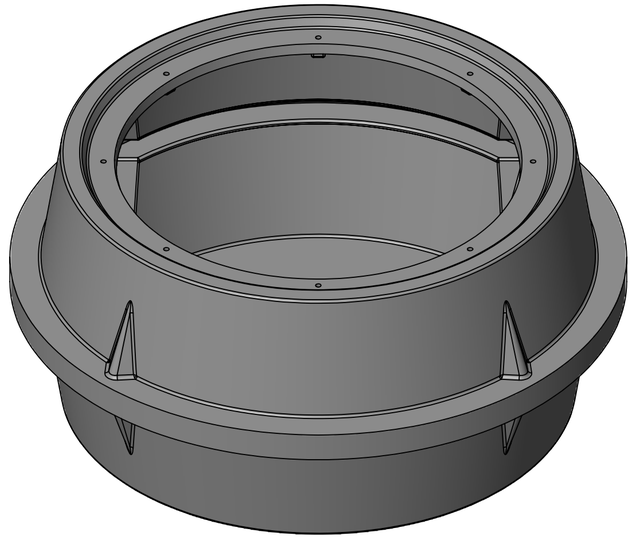

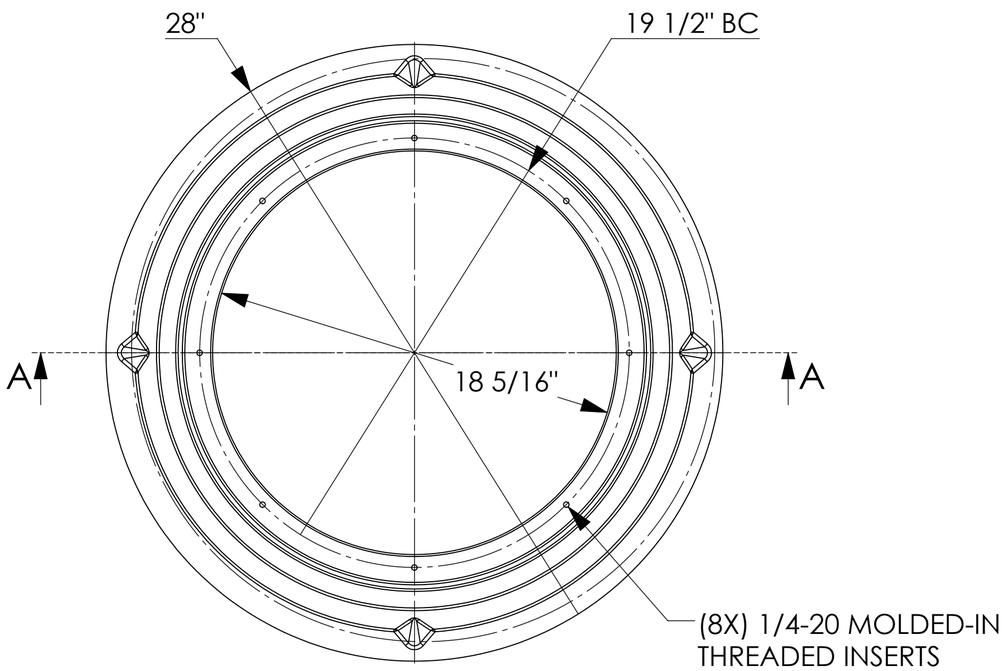

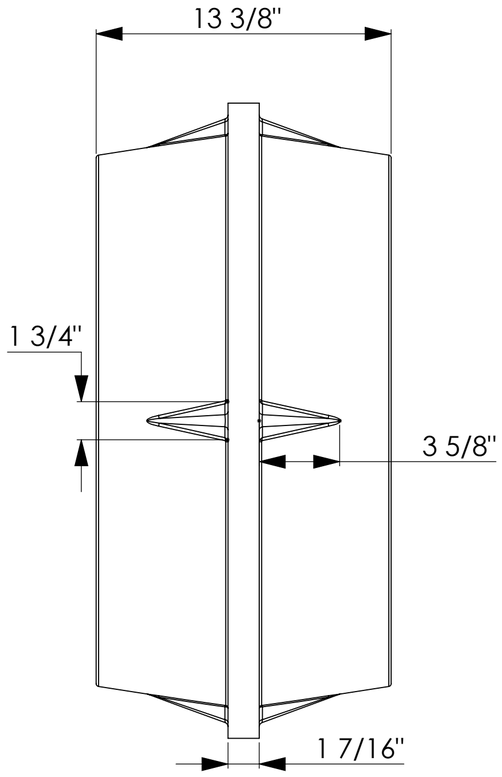

VOLUME=23.5 GALLONS

UNLESS OTHERWISE SPECIFIED:
DIMENSIONS ARE IN MILLIMETERS
SURFACE FINISH:
TOLERANCES:
LINEAR:
ANGULAR:

PUMP & DISCONNECT:

SO:

PO:

DO NOT SCALE DRAWING

REVISION 01

	NAME	DATE
DRAWN	ADM	12/20/2021
CHK'D	-	-
APPV'D		
MFG		
Q.A		

MATERIAL: LLDPE

WEIGHT: 14 LBS

TITLE: SHALLOW BASIN- 24" TO 18" DIAMETER ROLL TOP

DWG NO. LOPRO24

A2

SCALE:1:5

SHEET 1 OF 1

TOPP INDUSTRIES INCORPORATED
P.O. BOX 420 ^ HWY. 25 N.
ROCHESTER, IN. 46975
(800) 354-4534 FAX: (574) 223-6106